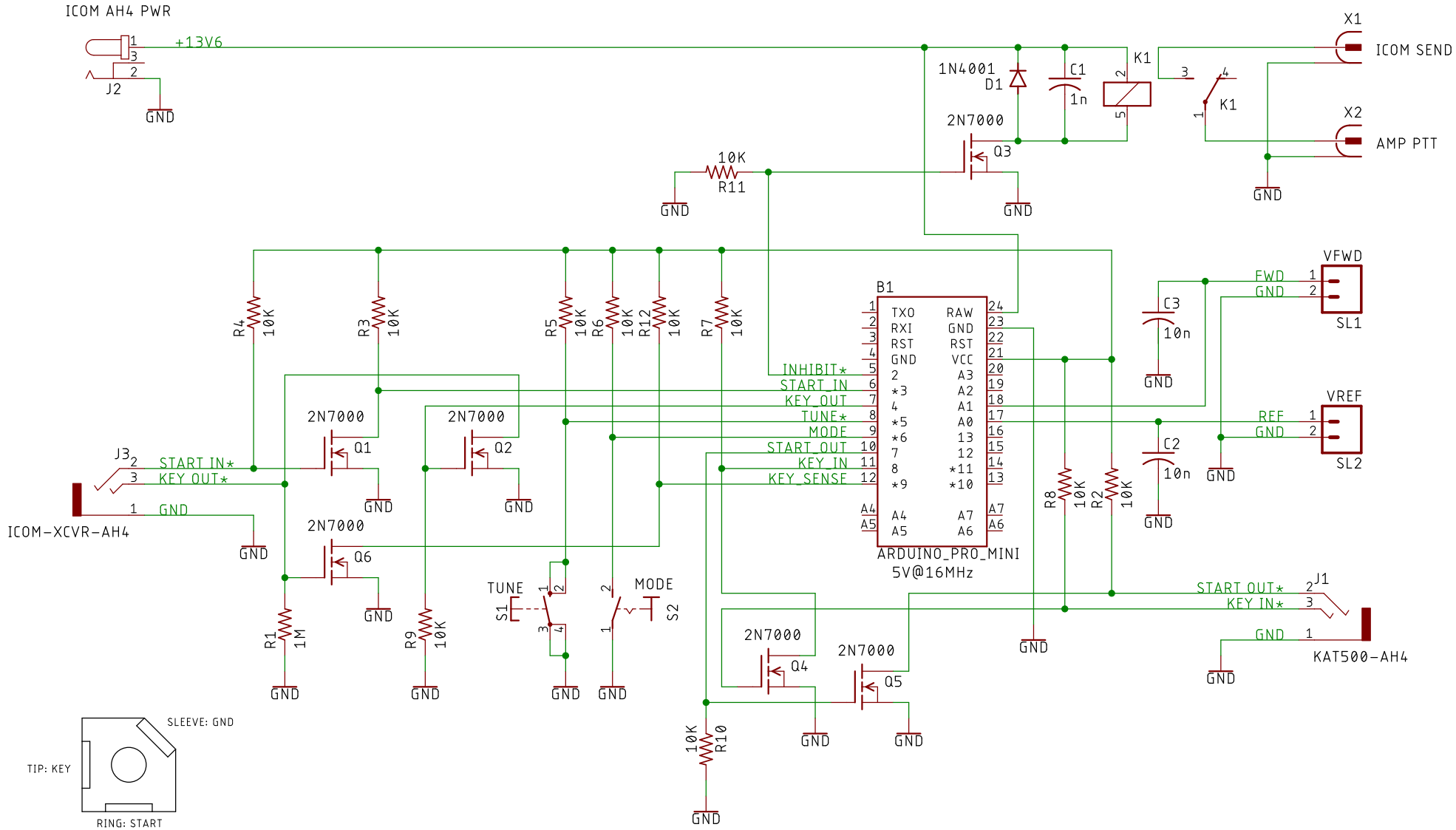

FOR USE WITH ICOM IC-7610, OR ANY ICOM TRANSCEIVER USING THE ICOM AH-4 AUTO-TUNER PROTOCOL, THE ELECRAFT KPA-500 POWER AMPLIFIER, THE MFJ-994BRT REMOTE AUTO-TUNER AND FOXDELTA HF BALANCED BRIDGE.

IF AN ELECRAFT KAT500 IS USED TO TUNE OTHER ANTENNAS, AND USES ONE ANTENNA PORT TO ROUTE RF TO THE MFJ-994BRT, THE MODE SWITCH CAN BE USED TO PASS THROUGH THE AH4 PROTOCOL SIGNALS WHEN THE ANTENNA PORT FOR THE MFJ-994BRT IS NOT SELECTED. NOTE THAT WHEN THE ANTENNA PORT FOR THE MFJ-994BRT IS SELECTED, THE KAT500 SHOULD BE PLACED INTO BYPASS MODE TO ALLOW THE EXTERNAL MFJ-994BRT TO PROPERLY PERFORM THE TUNING OPERATIONS. MODE A SHOULD BE USED WHEN THE MFJ-994BRT ANTENNA PORT IS SELECTED ON THE KAT500. FOR ALL OTHER KAT500 ANTENNA PORT SELECTIONS, MODE B SHOULD BE USED.

Icom AH4 ATU Protocol Emulator	v2.3
For use with MFJ-994BRT Remote Antenna Tuner	
	11/25/22 3:36 PM
	Sheet: 1/1